ECE532 Digital Systems Design

# Assignment 2
# FPGA Design Practices

Tianze Zhang
1005459585

# 1 Random Access Memories (RAMs)

## Q1. A table listing the resource utilization obtained for each implementation

| Ram_style | Ram size | Slice LUTs | Slice Registers | Block RAM |
|---|---|---|---|---|
| Registers | 256x32 | 4616 | 8256 | NA |
| Distributed RAM | 256x32 | 420 | 64 | NA |
| Block RAM | 256x32 | NA | NA | 1 |
| Registers | 512x32 | 9331 | 16448 | NA |
| Distributed RAM | 512x32 | 840 | 64 | NA |
| Block RAM | 512x32 | NA | NA | 1 |

## Q2. A discussion comparing the different storage primitives. When would you want to use a specific primitive to implement a certain memory?

Registers: Register access is extremely rapid, taking only one clock cycle. However, Registers use a high number of slice registers in the FPGA fabric, limiting their scalability for bigger memory. Registers are often constructed using flip-flops or latches and are best suited for activities that demand rapid processing.

Distributed RAM is accomplished with a mix of LUTs and flip-flops, resulting in a balance of performance and resource utilization. It is appropriate for applications where latency requirements are not as severe as with registers, but resource utilization must be optimized.

Block RAM is a type of dedicated memory that provides high-density storage and may be accessed in a few clock cycles. It has a higher latency than the other two alternatives. It is appropriate for applications requiring minimal latency on huge data collections, such as data processing.

# 2 DSP Units

## Q1. A table listing the resource utilization and Fmax obtained for each of your four implementations

| CONFIG | DSP48E1 | LUT | REGISTER | FMAX(Mhz) |
|---|---|---|---|---|
| DSP WIDTH16 | 1 | 1(for out_vld signal) | 3 | 689 |
| NO DSP WIDTH16 | NA | 362 | 117 | 689 |
| DSP WIDTH32 | 5 | 49 | 37 | 225 |
| NO DSP WIDTH32 | NA | 1284 | 229 | 689 |

## Q2. A description of how you made your implementation pack into a single DSP48E1 block and what changed when the width was set to 32-bits

To enable the DSP block, add the following code at the start of the module: (*use_dsp48 = "yes"*).

After changing the width to 32 bits. The number of DSP48E1 slices is raised to 7, and 64 LUTs are employed. The reason is because a single DSP slice cannot handle data with a width of 32 bits.

## Q3. A discussion comparing the utilization and Fmax of LUT vs DSP implementations. Are there cases when you would prefer using a particular resource?

In terms of utilization, with a 32-bit data width, employing DSP costs 2.92% of total DSP consumption, but using simply FF and LUTs costs 2.1% of total utilization. As a result, the usage cost is comparable to one another. The Fmax is greater with DSP slices than without them. This is because DSP is specialized hardware that can do arithmetic operations like add and multiply

in a single cycle. On the other hand, LUTs take many clock cycles to do the same work, resulting in a lower Fmax.
If the application is primarily concerned with arithmetic operations, such as video processing, DSP is a preferable solution; if the application requires a combination of arithmetic and logic functions, LUTs are appropriate.

# 3 Resource Trade-offs

## Q1. A table listing the resource utilization obtained for each implementation

| Type | LUTs | Registers | DSPs | Mem |
|---|---|---|---|---|
| Memory Mapping | NA | NA | NA | 0.5 |
| Direct compute | 55 | NA | 1 | NA |

## Q2. A discussion comparing the different techniques. When would it be beneficial to use a RAM LUTversus performing the computation? Is it possible to combine the two techniques?

RAM LUT is useful when dealing with vast amounts of data and repetitive computations.
It is possible to combine the two methods: if an application requires repetitive computation with varied inputs and needs to recall the computed results later to perform additional actions, the computed results could be stored in a BRAM and then retrieved directly, potentially resulting in faster overall performance.

# Appendix

## PART1

### Registers with width 256

C:/Users/Administrator/Desktop/532_assign2/part1/ram532.v

```
#(
  parameter C_ADDR_WIDTH = 8,
  parameter C_DATA_WIDTH = 32
)
(
  input  clk,
  input  wen,
  input  [C_DATA_WIDTH-1: 0] wdata,
  input  [C_ADDR_WIDTH-1: 0] waddr,
  output [C_DATA_WIDTH-1: 0] rdata_0,
  input  [C_ADDR_WIDTH-1: 0] raddr_0,
  output [C_DATA_WIDTH-1: 0] rdata_1,
  input  [C_ADDR_WIDTH-1: 0] raddr_1
);

    // Your Code Here
    reg [C_DATA_WIDTH-1: 0]internal_rdata_0;
    reg [C_DATA_WIDTH-1: 0]internal_rdata_1;

    (* ram_style = "registers" *) reg [C_DATA_WIDTH-1:0] myram [2**C_ADDR_WIDTH-1:0]; //exa
```

rts | Design Runs | Utilization | Debug

Hierarchy

| Name | Slice LUTs (63400) | Slice Registers (126800) | F7 Muxes (31700) | F8 Muxes (15850) |
|---|---|---|---|---|
| ram532 | 4616 | 8256 | 2176 | 1088 |

Distributed with width 256

Schematic × ram532.v ×

C:/Users/Administrator/Desktop/532_assign2/part1/ram532.v

```
#(
  parameter C_ADDR_WIDTH = 8,
  parameter C_DATA_WIDTH = 32
)
(
  input  clk,
  input  wen,
  input  [C_DATA_WIDTH-1: 0] wdata,
  input  [C_ADDR_WIDTH-1: 0] waddr,
  output [C_DATA_WIDTH-1: 0] rdata_0,
  input  [C_ADDR_WIDTH-1: 0] raddr_0,
  output [C_DATA_WIDTH-1: 0] rdata_1,
  input  [C_ADDR_WIDTH-1: 0] raddr_1
);

    // Your Code Here
    reg [C_DATA_WIDTH-1: 0]internal_rdata_0;
    reg [C_DATA_WIDTH-1: 0]internal_rdata_1;

    (* ram_style = "distributed" *) reg [C_DATA_WIDTH-1:0] myram [2**C_ADDR_WIDTH-1:0]; //
```

rts | Design Runs | Utilization × | Debug

Hierarchy

| Name | Slice LUTs (63400) | Slice Registers (126800) |
|---|---|---|
| ram532 | 420 | 64 |

## Registers with width 512:

Schematic × ram532.v ×

C:/Users/Administrator/Desktop/532_assign2/part1/ram532.v

```
#(
  parameter C_ADDR_WIDTH = 9,
  parameter C_DATA_WIDTH = 32
)
(
  input  clk,
  input  wen,
  input  [C_DATA_WIDTH-1: 0] wdata,
  input  [C_ADDR_WIDTH-1: 0] waddr,
  output [C_DATA_WIDTH-1: 0] rdata_0,
  input  [C_ADDR_WIDTH-1: 0] raddr_0,
  output [C_DATA_WIDTH-1: 0] rdata_1,
  input  [C_ADDR_WIDTH-1: 0] raddr_1
);

    // Your Code Here
    reg [C_DATA_WIDTH-1: 0]internal_rdata_0;
    reg [C_DATA_WIDTH-1: 0]internal_rdata_1;

    (* ram_style = "registers" *) reg [C_DATA_WIDTH-1:0] myram [2**C_ADDR_WIDTH-1:0]; //example code from AMD website.
```

rts | Design Runs | Utilization × | Debug

Hierarchy

| Name | Slice LUTs (63400) | Slice Registers (126800) | F7 Muxes (31700) | F8 Muxes (15850) |
|---|---|---|---|---|
| ram532 | 9331 | 16448 | 4352 | 2048 |

## Distributed with width 512:

Schematic × ram532.v ×

C:/Users/Administrator/Desktop/532_assign2/part1/ram532.v

```
#(
  parameter C_ADDR_WIDTH = 9,
  parameter C_DATA_WIDTH = 32
)
(
  input  clk,
  input  wen,
  input  [C_DATA_WIDTH-1: 0] wdata,
  input  [C_ADDR_WIDTH-1: 0] waddr,
  output [C_DATA_WIDTH-1: 0] rdata_0,
  input  [C_ADDR_WIDTH-1: 0] raddr_0,
  output [C_DATA_WIDTH-1: 0] rdata_1,
  input  [C_ADDR_WIDTH-1: 0] raddr_1
);

    // Your Code Here
    reg [C_DATA_WIDTH-1: 0]internal_rdata_0;
    reg [C_DATA_WIDTH-1: 0]internal_rdata_1;

    (* ram_style = "distributed" *) reg [C_DATA_WIDTH-1:0] myram [2**C_ADDR_WIDTH-1:0]; //example code from AMD website.
```

rts | Design Runs | Utilization × | Debug

Hierarchy

| Name | Slice LUTs (63400) | Slice Registers (126800) | F7 Muxes (31700) |
|---|---|---|---|
| ram532 | 840 | 64 | 64 |

## Block with width 512:

```
    // Your Code Here
    reg internal_rdata_0;
    reg internal_rdata_1;

    (* ram_style = "block" *) reg [C_DATA_WIDTH-1:0] myram [2**C_ADDR_WIDTH-1:0]; //example code from AMD website.

    always @ (posedge clk) begin
        if (wen) begin //When write enable is high
            myram[waddr] <= wdata; //the data contained in the wdata wires is to be stored in the RAM at address waddr in the next clock cycle
```

eports | Design Runs | Utilization × | Debug

Hierarchy

| Name | Block RAM Tile (135) |
|---|---|
| ram532 | 1 |

# PART2

## Single DSP with width of 16

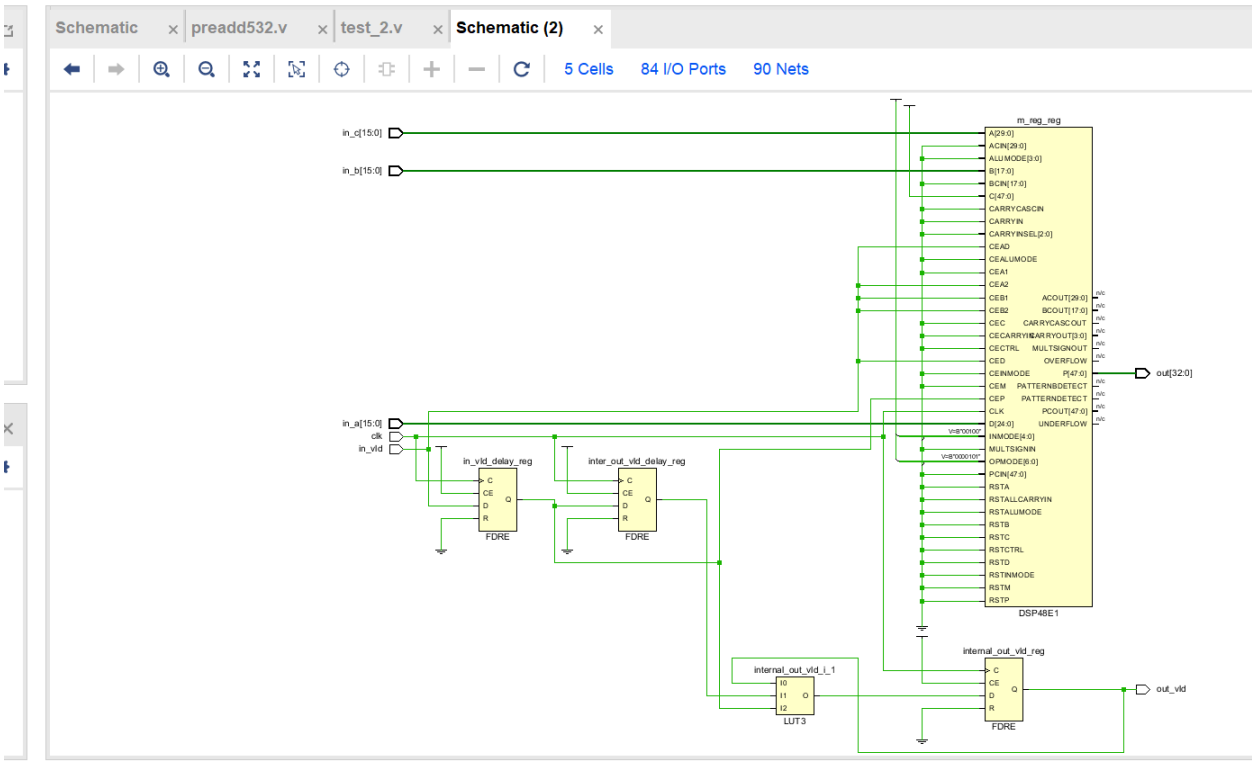


Reports | Design Runs | **Utilization** | Debug

**Hierarchy**

| Name | Slice LUTs (63400) | Slice Registers (126800) | DSPs (240) |
|---|---|---|---|
| preadd532 | 1 | 3 | 1 |

preadd532
- Nets (90)
- Leaf Cells (8)

Properties

Select an object to see properties

```
(* use_dsp48 = "yes" *) // set to yes in order to using DSP block
module preadd532
#(
  parameter C_WIDTH = 16
)
(
    input clk,
    input in_vld,
```

Tcl Console | Messages | Log | Reports | Design Runs | **Timing** | Utilization | Debug

**Unconstrained Paths - clk - NONE - Setup**

- General Information
- Timer Settings
- Design Timing Summary
- Clock Summary (1)
- Check Timing (83)
- Intra-Clock Paths
- Inter-Clock Paths
- Other Path Groups
- User Ignored Paths
- Unconstrained Paths
  - NONE to clk
    - Setup (10)

| Name | Slack | Levels | Routes | High Fanout | From | To | Total Delay | Logic Delay | Net Delay | Requirement | Source Clock | Destination Clock | Exception |
|---|---|---|---|---|---|---|---|---|---|---|---|---|---|
| Path 27 | ∞ | 0 | 1 | 1 | internal_out_vld_reg/C | out_vld | 1.451 | 0.478 | 0.973 | ∞ | clk | | |
| Path 28 | ∞ | 0 | 1 | 0 | m_reg_reg/CLK | out[0] | 1.407 | 0.434 | 0.973 | ∞ | clk | | |
| Path 29 | ∞ | 0 | 1 | 0 | m_reg_reg/CLK | out[10] | 1.407 | 0.434 | 0.973 | ∞ | clk | | |
| Path 30 | ∞ | 0 | 1 | 0 | m_reg_reg/CLK | out[11] | 1.407 | 0.434 | 0.973 | ∞ | clk | | |
| Path 31 | ∞ | 0 | 1 | 0 | m_reg_reg/CLK | out[12] | 1.407 | 0.434 | 0.973 | ∞ | clk | | |
| Path 32 | ∞ | 0 | 1 | 0 | m_reg_reg/CLK | out[13] | 1.407 | 0.434 | 0.973 | ∞ | clk | | |
| Path 33 | ∞ | 0 | 1 | 0 | m_reg_reg/CLK | out[14] | 1.407 | 0.434 | 0.973 | ∞ | clk | | |
| Path 34 | ∞ | 0 | 1 | 0 | m_reg_reg/CLK | out[15] | 1.407 | 0.434 | 0.973 | ∞ | clk | | |
| Path 35 | ∞ | 0 | 1 | 0 | m_reg_reg/CLK | out[16] | 1.407 | 0.434 | 0.973 | ∞ | clk | | |
| Path 36 | ∞ | 0 | 1 | 0 | m_reg_reg/CLK | out[17] | 1.407 | 0.434 | 0.973 | ∞ | clk | | |

No DSP width 16:

Schematic | preadd532.v | test_2.v | Schematic (2)

C:/Users/Administrator/Desktop/532_assign2/part2/preadd532.v

```
(* use_dsp48 = "no" *) // set to yes in order to using DSP block
module preadd532
#(
  parameter C_WIDTH = 16
)
(
    input clk,
    input in_vld,
```

ports | Design Runs | Timing | Utilization | Debug

Hierarchy

| Name | Slice LUTs (63400) | Slice Registers (126800) |
|---|---|---|
| preadd532 | 362 | 117 |

DSP 32 with width 32:

Schematic | preadd532.v | test_2.v | Schematic (2)

C:/Users/Administrator/Desktop/532_assign2/part2/preadd532.v

```
(* use_dsp48 = "yes" *) // set to yes in order to using DSP block
module preadd532
#(
  parameter C_WIDTH = 32
)
(
    input clk,
    input in_vld,
    input  signed [C_WIDTH-1: 0] in_a,
    input  signed [C_WIDTH-1: 0] in_b,
    input  signed [C_WIDTH-1: 0] in_c,
    output signed [2*C_WIDTH: 0] out,
    output out_vld
```

Reports | Design Runs | Timing | Utilization | Debug

Hierarchy

| Name | Slice LUTs (63400) | Slice Registers (126800) | DSPs (240) |
|---|---|---|---|
| preadd532 | 49 | 37 | 5 |

Schematic | preadd532.v | test_2.v | Schematic (2)

C:/Users/Administrator/Desktop/532_assign2/part2/preadd532.v

```
(* use_dsp48 = "yes" *) // set to yes in order to using DSP block
module preadd532
#(
  parameter C_WIDTH = 32
)
(
    input clk,
    input in_vld,
    input  signed [C_WIDTH-1: 0] in_a,
    input  signed [C_WIDTH-1: 0] in_b,
    input  signed [C_WIDTH-1: 0] in_c,
    output signed [2*C_WIDTH: 0] out,
    output out_vld
```

Design Runs | Timing | Utilization | Debug

Unconstrained Paths - clk - NONE - Setup

| Name | Slack ^1 | Levels | Routes | High Fanout | From | To | Total Delay | Logic Delay | Net Delay | Requirement | Source Clock | Destination Clock | Exception | Cloc |
|---|---|---|---|---|---|---|---|---|---|---|---|---|---|---|
| Path 41 | ∞ | 13 | 14 | 1 | m_reg_reg[16]__0/C | out[64] | 4.444 | 2.805 | 1.639 | ∞ | clk | | | |
| Path 42 | ∞ | 12 | 13 | 1 | m_reg_reg[16]__0/C | out[61] | 4.432 | 2.793 | 1.639 | ∞ | clk | | | |
| Path 43 | ∞ | 12 | 13 | 1 | m_reg_reg[16]__0/C | out[63] | 4.426 | 2.787 | 1.639 | ∞ | clk | | | |
| Path 44 | ∞ | 12 | 13 | 1 | m_reg_reg[16]__0/C | out[62] | 4.351 | 2.712 | 1.639 | ∞ | clk | | | |
| Path 45 | ∞ | 12 | 13 | 1 | m_reg_reg[16]__0/C | out[60] | 4.327 | 2.688 | 1.639 | ∞ | clk | | | |
| Path 46 | ∞ | 11 | 12 | 1 | m_reg_reg[16]__0/C | out[57] | 4.315 | 2.676 | 1.639 | ∞ | clk | | | |
| Path 47 | ∞ | 11 | 12 | 1 | m_reg_reg[16]__0/C | out[59] | 4.309 | 2.670 | 1.639 | ∞ | clk | | | |
| Path 48 | ∞ | 11 | 12 | 1 | m_reg_reg[16]__0/C | out[58] | 4.234 | 2.595 | 1.639 | ∞ | clk | | | |
| Path 49 | ∞ | 11 | 12 | 1 | m_reg_reg[16]__0/C | out[56] | 4.210 | 2.571 | 1.639 | ∞ | clk | | | |
| Path 50 | ∞ | 10 | 11 | 1 | m_reg_reg[16]__0/C | out[53] | 4.198 | 2.559 | 1.639 | ∞ | clk | | | |

## NO DSP WITH width 32:

Schematic | preadd532.v | test_2.v | Schematic (2)

C:/Users/Administrator/Desktop/532_assign2/part2/preadd532.v

```
(* use_dsp48 = "no" *) // set to yes in order to using DSP block
module preadd532
#(
  parameter C_WIDTH = 32
)
(
    input clk,
    input in_vld,
    input  signed [C_WIDTH-1: 0] in_a,
    input  signed [C_WIDTH-1: 0] in_b,
    input  signed [C_WIDTH-1: 0] in_c,
    output signed [2*C_WIDTH: 0] out,
    output out_vld
```

Reports | Design Runs | Timing | Utilization | Debug

Hierarchy

| Name | Slice LUTs (63400) | Slice Registers (126800) |
|---|---|---|
| preadd532 | 1284 | 229 |

Schematic | preadd532.v | test_2.v | Schematic (2)

C:/Users/Administrator/Desktop/532_assign2/part2/preadd532.v

```
(* use_dsp48 = "no" *) // set to yes in order to using DSP block
module preadd532
#(
  parameter C_WIDTH = 32
)
(
    input clk,
    input in_vld,
    input  signed [C_WIDTH-1: 0] in_a,
    input  signed [C_WIDTH-1: 0] in_b,
    input  signed [C_WIDTH-1: 0] in_c,
    output signed [2*C_WIDTH: 0] out,
    output out_vld
```

ts | Design Runs | Timing | Utilization | Debug

Unconstrained Paths - clk - NONE - Setup

| Name | Slack ^1 | Levels | Routes | High Fanout | From | To | Total Delay | Logic Delay | Net Delay | Requirement | Source Clock | Destination |
|---|---|---|---|---|---|---|---|---|---|---|---|---|
| Path 41 | ∞ | 0 | 1 | 0 | m_reg_reg[0]/C | out[0] | 1.451 | 0.478 | 0.973 | ∞ | clk | |
| Path 42 | ∞ | 0 | 1 | 0 | m_reg_reg[10]/C | out[10] | 1.451 | 0.478 | 0.973 | ∞ | clk | |
| Path 43 | ∞ | 0 | 1 | 0 | m_reg_reg[11]/C | out[11] | 1.451 | 0.478 | 0.973 | ∞ | clk | |
| Path 44 | ∞ | 0 | 1 | 0 | m_reg_reg[12]/C | out[12] | 1.451 | 0.478 | 0.973 | ∞ | clk | |
| Path 45 | ∞ | 0 | 1 | 0 | m_reg_reg[13]/C | out[13] | 1.451 | 0.478 | 0.973 | ∞ | clk | |
| Path 46 | ∞ | 0 | 1 | 0 | m_reg_reg[14]/C | out[14] | 1.451 | 0.478 | 0.973 | ∞ | clk | |
| Path 47 | ∞ | 0 | 1 | 0 | m_reg_reg[15]/C | out[15] | 1.451 | 0.478 | 0.973 | ∞ | clk | |
| Path 48 | ∞ | 0 | 1 | 0 | m_reg_reg[16]/C | out[16] | 1.451 | 0.478 | 0.973 | ∞ | clk | |
| Path 49 | ∞ | 0 | 1 | 0 | m_reg_reg[17]/C | out[17] | 1.451 | 0.478 | 0.973 | ∞ | clk | |
| Path 50 | ∞ | 0 | 1 | 0 | m_reg_reg[18]/C | out[18] | 1.451 | 0.478 | 0.973 | ∞ | clk | |

# PART3

## Using computation:

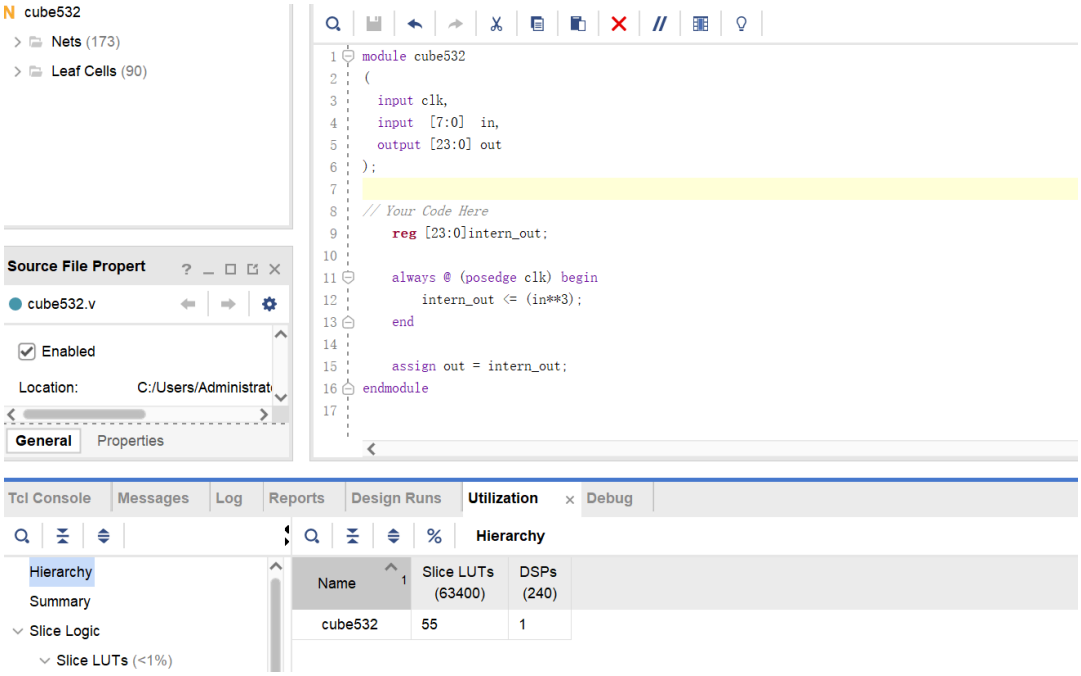

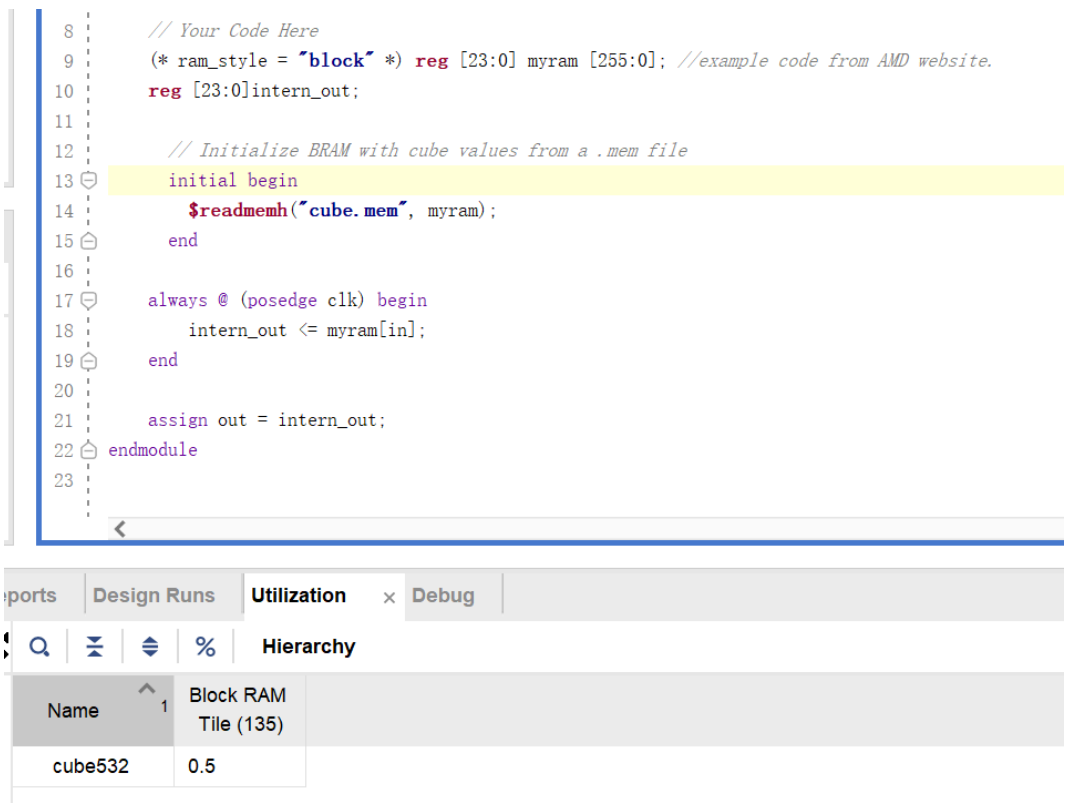
## Using Mem file: